Fig. 1-1 Combination probe KS1D-HT with flue gas bypass tube

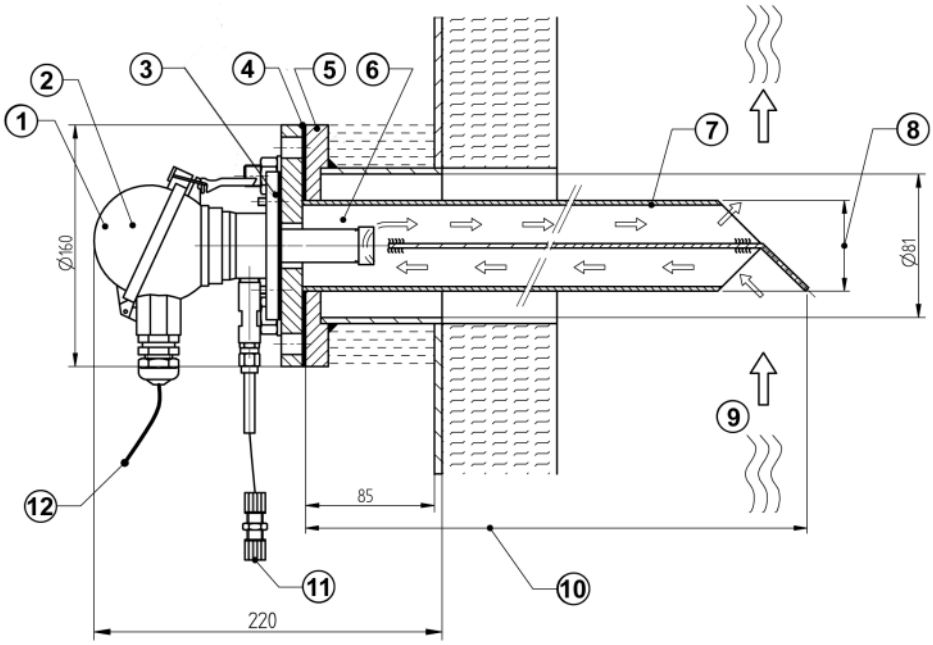

Fig. 1-2 Dimensional drawing Combination Probe KS1D-HT (high temperature) with flue gas bypass tube

1 Combination Probe KS1D-HT high temperature type 656R2015

2 Connecting head max. 100 °C

3 Flange seal Novaphit type 656P0263

4 Flange seal graphite type 655P4211

5 Counter flange with tube socket KTL coated type 655R0179 or
Counter flange with tube socket stainless steel 1.4571 type 655R0180

6 Flue gas temperature at the probe head max. 300 °C in connection with LT3-F
Flue gas temperature at the probe head max. 450 °C in connection with LT3 and LT2

7 Flue gas bypass tube

8 Diameter/diagonal maximum 70 mm

9 Gas velocity:
< 10 m/s at a length of > 1,000 mm
< 30 m/s at a length of ≤ 1,000 mm
From 16 m/s on with increasing accuracy!

10 Length 500 ... 2,000 mm

11 Hose connection 4/6 mm (0.02 in.) for calibration gas

12 Connecting cable with plug, length 2 m (6.6 ft.)

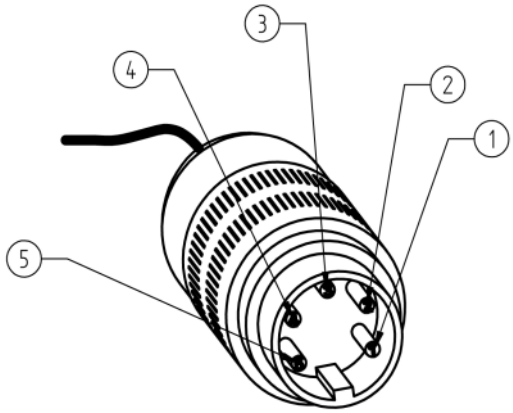

1 = (+) probe signal O_2/ CO_e (black)
2 = (-) probe signal CO_e (grey)
3 = probe heating (white)
4 = probe heating (white)
5 = (-) probe signal O_2 (red or blue)

Fig. 1-3 Pin assignment for plug

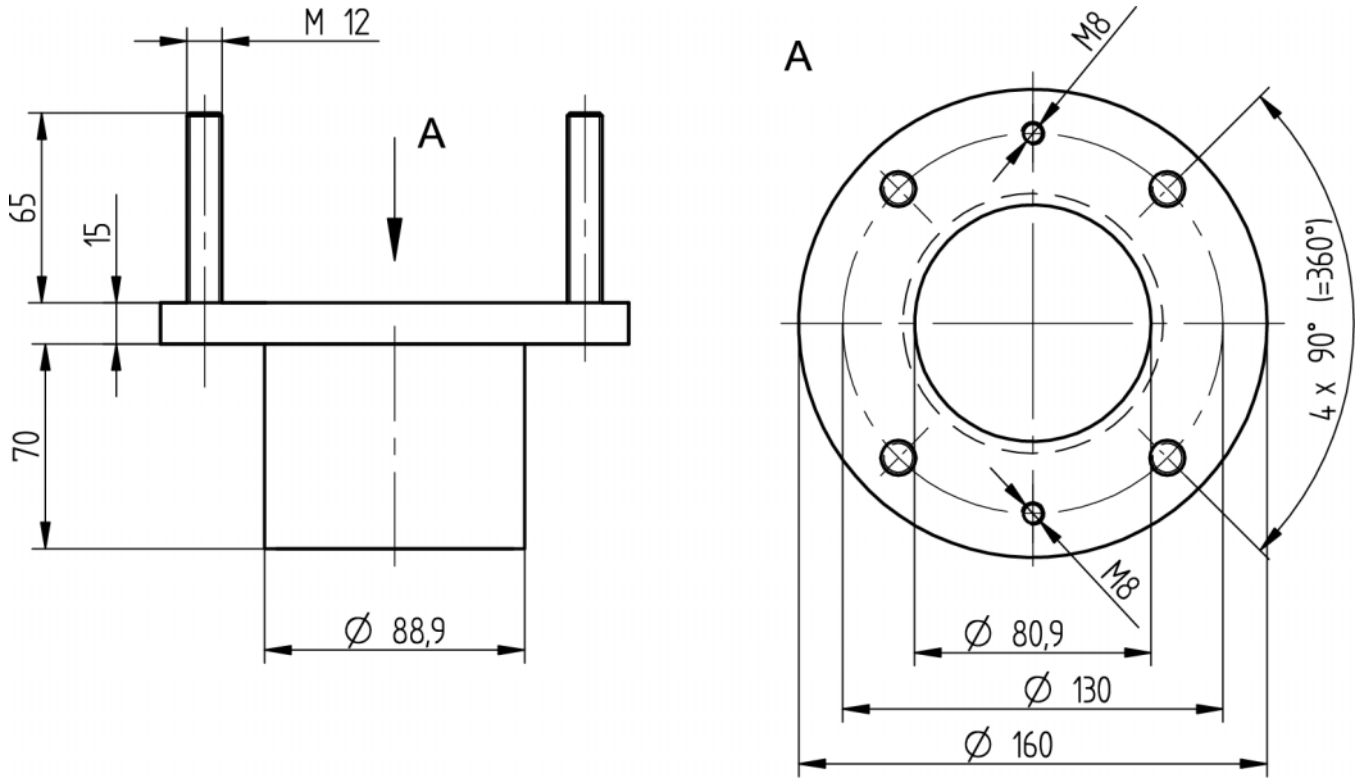

Fig. 1-4 Dimensions of counter flange with tube socket

Technical Data Combination Probe KS1D-HT

Technical data*	
Measuring range	**O_2:** 0 - 21 % O_2
	CO_e: 0 - 1,000 ppm (0 - 10,000 ppm upon request)
Measuring precision	**O_2:** ± 5 % of measured value - not better than ± 0.3 vol.%
	CO_e: ± 25 % of measured value- not better than ± 20 ppm after prior calibration under operating conditions with a CO reference measurement In measuring range ≤ 100 ppm: ± 10 ppm
Sensor signal	**O_2:** -30 ... +150 mV
	CO_e: -30 ... +800 mV
Response time	**O_2:** t_{60}: < 3 s t_{90}: < 9 s
	CO_e: t_{60}: < 9 s (unfiltered < 3 s) t_{90}: < 13 s (unfiltered < 4 s)
Response time with flue gas bypass tube**	$t_{60EGDT} = \Delta t_{EGDT} + t_{60}$ (see *Fig. 1-5 Flue gas bypass tube delay time as function of the velocity in the exhaust air channel depending on the varying lengths of the flue gas bypass tube*)
Relaxation time (measurement readiness after overload)	**O_2:** t_{90}: < 8 s
	CO_e: t_{90}: < 9 s
Offset to environment	**O_2** < 0.3 vol. %
	CO_e< 2 ppm
Hysteresis	**O_2** < 1 % from measured value
	CO_e < 1.5 % from measured value
Linearity	**O_2** < 1 % from measured value
	CO_e < 9 % from measured value
Repeating precision	**O_2** < 0.1 % deviation from measured value
	CO_e < 0.7 % deviation from measured value
Ambient pressure dependency	**O_2** < 0.1% from measured value (of normal pressure at sea level in comparison with pressure at altitude of 2000 m, i.e., op = -200 mbar)
	CO_e < 16 % from measured value (of normal pressure at sea level in comparison with pressure at altitude of 2000 m, i.e., op = -200 mbar)
Differential pressure dependency	**O_2** < -1.8 mV U_{O2} per 100 mbar overpressure in the measuring chamber in comparison with environment
	CO_e < -0.17 mV U_{COe} per 100 mbar overpressure in the measuring chamber in comparison with environment
Drift	**O_2** < 1.7 % from measured value (after 1000 h of operation in EL light fuel oil and 1004 switching cycles on/off)
	CO_e < 18.4 % from measured value (after 1000 h of operation in EL light fuel oil and 1004 switching cycles on/off)

Technical Data Combination Probe KS1D-HT

Technical data*	
Cross sensitivity***	**O_2:** to CO_2 (15 vol. %) < 0.1 vol. % **O_2:** to CO (874 ppm) < 0.1 vol. % **O_2:** to CH_4 (76 ppm) < 0.1 vol. % **O_2:** to SO_2 (76 ppm) < 0.1 vol. % **O_2:** to NO (245 ppm) < 0.1 vol. %
	CO_e: to CO_2 (15 vol. %) < 26 ppm **CO_e:** to O_2 (1 vol. %) < 38 ppm
Moisture	**O_2:** < 2.3% from measured value **CO_e:** < 9.1 from measured value
Influence of the installation position	None if KS1D is installed according to the information in the operating instructions.
Influence of the mains voltage	None if KS1D is operated according to the information in the operating instructions.
Influence of leakage	None if KS1D is operated according to the information in the operating instructions.
Influence of the measuring gas	Change of -1.6 mV/100 mbar
Internal resistance of probe	15 ... 30 Ω (ZrO_2 measuring cell in the air in case of 22 W heating output)
Heating consumption	10 ... 25 W (at T_{gas} 350 °C approx. 18 W) (according to design, measuring gas temperature, and measuring speed)
Supply voltage for heating	AC/DC At P_H 18 VA → 11.4 V At P_H 20 VA → 12.34 V At P_H 25 VA → 14.8 V
Heating current at P_H 20 VA	Approx. 1.6 A Approx. 5 A short term during heating PTC characteristic
Insulation resistance	< 30 MΩ (between heating and probe connection)
Lifetime	> 3 years (in case of light fuel oil and natural gas)
Weight	1,300 g
Material of probe housing	1.4571
Material of connection housing	Aluminium
Material of connecting line	Nickel-plated copper strand FEP insulation
Operating temperature of the measuring cell (sensor) at 13 V heating voltage in the air (20 °C)	650 °C
Measuring principle	Zirconium dioxide cell (ZrO_2) potentiometric (voltage probe)
Heating time	10 min until operating temperature is reached

* Information according to EN 16340:2014 D

** Test report LTC-14-IB-09-V1.0 upon request

*** O_2: Information assumes an operating gas composition of 5 vol. % O_2, rest is N_2
CO_e: Information assumes an operating gas composition of 5 vol. % O_2, 333 ppm CO_e, rest is N_2
(333 ppm CO_e = 166.5 ppm H_2 + 166.5 ppm CO)

Technical Data Combination Probe KS1D-HT

Conditions for use	
Mounting / measuring gas extraction device	Directly in exhaust gas channel / in situ
Seal tightness	$q_L \leq 100\ cm^3/h$*
Mounting position	Horizontal to vertical
Permissible fuels	Residue-free, gaseous hydrocarbons, light fuel oil, heavy fuel oil (HFO), lignite and coal, biomass (according to design)**
Permissible exhaust gas temperature on probe head	< 450 °C***
Permissible operating temperature	< 100 °C on cable lead < 100 °C on connecting cable
Permissible storage temperature	-20 °C ... +70 °C
Permissible measuring gas speed	< 16 m/s (higher measurement speed increases the measurement error). Current safety measures can be deployed. **Attention:** With flue gas bypass tube length > 1 m, a high current speed (> 30m/s) can lead to flutter and vibration of flue gas bypass tube.
Degree of protection	IP65

* According to DIN V 18160-1:2006-01, seal tightness towards environment through housing and fastening.

** EN 16340:2014 D approval (in connection with LT3-F) only with gaseous and liquid fuels

*** In connection with LT3-F max. 300 °C permissible flue gas temperature on probe head.
The flue gas temperature can be considerably higher since it is reduced by the correctly selected length of the flue gas bypass tube.

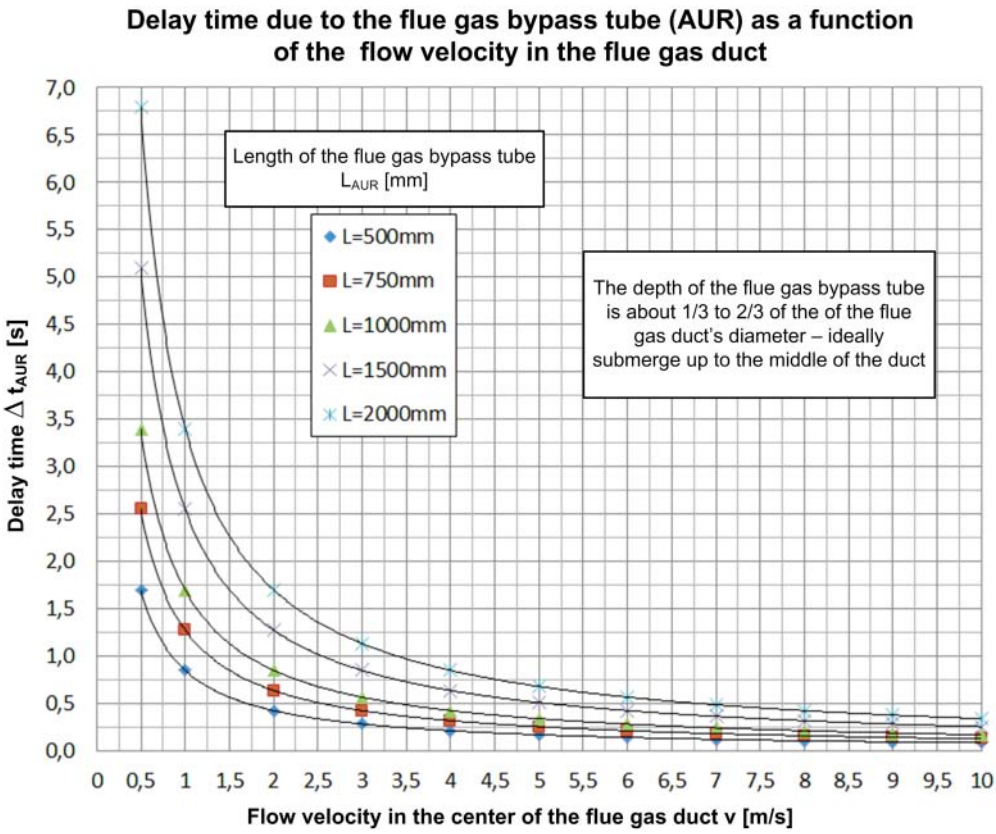

Fig. 1-5 Flue gas bypass tube delay time as function of the velocity in the exhaust air channel depending on the varying lengths of the flue gas bypass tube

The figure shows the delay time $\Delta \mathbf{t}_{EGDT}$ [s] resulting from the length of the flue gas bypass tube $\mathbf{L}_{EGDT}$ [mm] as a function of a flow velocity in the middle of the flue air channel v [m/s].

Order Information

Combination Probe KS1D-HT for simultaneous measurement of oxygen (O_2) and unburnt residue (CO/H_2) in combination with bypass tube for flue gas temperatures up to 1200 °C (2192 °F)

Description / Type	Type
Combination Probe KS1D-HT "high temperature", cable length 2 m (6.6 ft.), IP65	656R2015

Flue gas bypass tube ∅ 70 mm, material: stainless steel 1.4571, for measuring gas temperatures up to 750 °C (399 °F)

Type	656R1014	656R1015	656R1016	656R1080	656R1081
Length	500 mm (19.69 in)	750 mm (29.53 in)	1,000 mm (39.37 in)	1,500 mm (59.06 in)	2,000 mm (78.74 in)

Flue gas bypass tube ∅ 60 mm, material Inconel 600 for measuring gas temperatures up to 950 °C (1742 °F)

Type	656R1017	656R1018	656R1019	656R1085	656R1086
Length	500 mm (19.69 in)	750 mm (29.53 in)	1,000 mm (39.37 in)	1,500 mm (59.06 in)	2,000 mm (78.74 in)

Flue gas bypass tube ∅ 60 mm, material Kanthal for measuring gas temperatures up to 1200 °C (2192 °F)

Type	656R1021	656R1022	656R1023	656R1088	656R1089
Length	500 mm (19.69 in)	750 mm (29.53 in)	1,000 mm (39.37 in)	1,500 mm (59.06 in)	2,000 mm (78.74 in)

Counterflanges

Description / Type	Type
Counterflange, inside tube diameter 80 mm, tube length 70 mm, Material: steel, EPD black, int. hole diameter in acc. to DN65 PN6	655R0179
Counterflange, inside tube diameter 80 mm, special length up to 500 mm, material: steel galv., int. hole diameter in acc. to DN65 PN6	655R0179/S
Counterflange, inside tube diameter 80 mm, tube length 70 mm, Material: stainless steel 1.4571, int. hole diameter in acc. to DN65 PN6	655R0180
Counterflange, inside tube diameter 80 mm, special length up to 500 mm, material: stainless steel 1.4571, int. hole diameter in acc. to DN65 PN6	655R0180/S
Sealing for counterflange DN65 PN6, 3 mm, material: graphite	655P4211

The information in this publication is subject to technical changes.

LAMTEC Meß- und Regeltechnik für Feuerungen GmbH & Co. KG
Wiesenstraße 6
D-69190 Walldorf
Telefon: +49 (0) 6227 6052-0
Telefax: +49 (0) 6227 6052-57

info@lamtec.de
www.lamtec.de

Printed in Germany | Copyright © 2016

Print no. DLT3034-16-aEN-004