Technical Data Combination Probe KS1D without Housing

Fig. 1-1 Combination Probe KS1D without housing

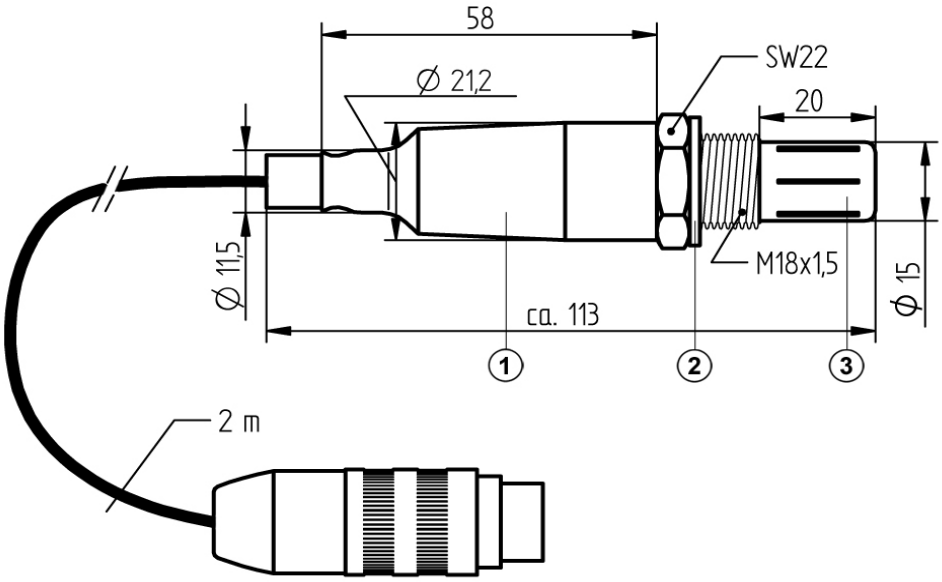

Fig. 1-2 Dimensional drawing KS1D combination probe without housing

No.	Description	Order no.
1	KS1D combination probe without housing	656R2010
2	sealing washer	
3	probe head	

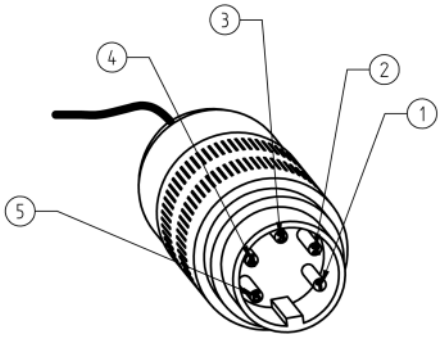

Fig. 1-3 Terminal assignment plug

1 = (+) probe signal O_2/ CO_e (black)

2 = (-) probe signal CO_e (grey)

3 = probe heater (white)

4 = probe heater (white)

5 = (-) probe signal O_2 (red or blue)

Technical Data Combination Probe KS1D without Housing

Technical data*	
Measuring range	**O_2:** 0 - 21 % O_2
	CO_e: 0 - 1,000 ppm (0 - 10,000 ppm upon request)
Measuring precision	**O_2:** ± 5 % of measured value - not better than ± 0.3 vol.%
	CO_e: ± 25 % of measured value- not better than ± 20 ppm after prior calibration under operating conditions with a CO reference measurement In measuring range ≤ 100 ppm: ± 10 ppm
Sensor signal	**O_2:** - 30 - + 150 mV
	CO_e: - 30 - + 800 mV
Response time	**O_2:** t_{60}: < 3 s t_{90}: < 9 s
	CO_e: t_{60}: < 9 s (unfiltered < 3 s) t_{90}: < 13 s (unfiltered < 4 s)
Relaxation time (measurement readiness after overload)	**O_2:** t_{90}: < 8 s
	CO_e: t_{90}: < 9 s
Offset to environment	**O_2** < 0.3 vol. %
	CO_e < 2 ppm
Hysteresis	**O_2** < 1% from measured value
	CO_e < 1.5 % from measured value
Linearity	**O_2** < 1 % from measured value
	CO_e < 9 % from measured value
Repeating precision	**O_2** < 0.1% deviation from measured value
	CO_e < 0.7 % deviation from measured value
Ambient pressure dependency	**O_2** < 0.1 % from measured value (of normal pressure at sea level in comparison with pressure at altitude of 200 m, i.e., op = -200 mbar)
	CO_e < 16 % from measured value (of normal pressure at sea level in comparison with pressure at altitude of 200 m, i.e., op = -200 mbar)
Differential pressure dependency	**O_2** < -1.8 mV U_{O2} per 100 mbar overpressure in the measuring chamber in comparison with environment
	CO_e < - 0.17 mV U_{COe} per 100 mbar overpressure in the measuring chamber in comparison with environment
Drift	**O_2** < 1.7 % from measured value (after 1000 h of operation in EL light fuel oil and 1004 switching cycles on/off)
	CO_e < 18.4 % from measured value (after 1000 h of operation in EL light fuel oil and 1004 switching cycles on/off)

Technical Data Combination Probe KS1D without Housing

Technical data*	
Cross sensitivity***	**O_2:** to CO_2 (15 vol. %) < 0.1 vol. % **O_2:** to CO (874 ppm) < 0.1 vol. % **O_2:** to CH_4 (76 ppm) < 0.1 vol. % **O_2:** to SO_2 (76 ppm) < 0.1 vol. % **O_2:** to NO (245 ppm) < 0.1 vol. %
	CO_e: to CO_2 (15 vol %) < 26 ppm **CO_e:** to O_2 (1 vol. %) < 38 ppm
Moisture	**O_2:** < 2.3 % from measured value **CO_e:** < 9.1 from measured value
Influence of the installation position	None if KS1D is installed according to the information in the operating instructions.
Influence of the mains voltage	None if KS1D is operated according to the information in the operating instructions.
Influence of leakage	None if KS1D is operated according to the information in the operating instructions.
Influence of the measuring gas	Change of -1.6 mV/100 mbar
Internal resistance of probe	15 - 25 Ω (ZrO_2 measuring cell in the air in case of 22 W heating output)
Heating consumption	10 - 25 W (according to design, measuring gas temperature, and measuring speed)
Supply voltage for heating	AC/DC At P_H 18 VA → 11.4 V At P_H 20 VA → 12.34 V At P_H 25 VA → 14.8 V
Heating current at P_H 20 VA	Approx. 1.6 A Approx. 5 A short term during heating PTC characteristic
Insulation resistance	< 30 MΩ (between heating and probe connection)
Lifetime	> 3 years (in case of light fuel oil and natural gas)
Weight	320 g
Material of probe housing	1.4571
Material of connecting line	Nickel-plated copper strand FEP insulation
Operating temperature of the measuring cell (sensor) at 13 V heating voltage in the air (20°C)	650 °C
Measuring principle	Zirconium dioxide cell (ZrO_2) potentiometric (voltage probe)
Heating time	10 min until operating temperature is reached

* Information according to EN 16340:2014 D

** Test report LTC-14-IB-09-V1.0 upon request

*** O_2: Information assumes an operating gas composition of 5 vol. % O_2, rest is N_2
CO_e: Information assumes an operating gas composition of 5 vol. % O_2, 333 ppm CO_e, rest is N_2
(333 ppm CO_e = 166.5 ppm H_2 + 166.5 ppm CO)

Conditions for use	
Mounting / measuring gas extraction device	Directly in exhaust gas channel / in situ
Seal tightness	$q_L \leq 100\ cm^3/h$*
Mounting position	Horizontal to vertical
Permissible fuels	Residue-free, gaseous hydrocarbons, light fuel oil, lignite and coal, biomass (according to design)**
Permissible exhaust gas temperature on probe head	< 450 °C ***
Permissible operating temperature	< 300 °C on hexagon of probe housing < 200 °C on cable lead < 150 °C on connecting cable
Permissible storage temperature	- 20 °C ... + 70 °C
Permissible measuring gas speed	< 2 m/s
Protection class acc. to DIN 40050	IP42

* According to DIN V 18160-1:2006-01, seal tightness towards environment through housing and fastening.

** EN 16340:2014 D approval (in connection with LT3-F) only with gaseous and liquid fuels

*** In Connection with LT3-F max. 300 °C permissible exhaust gas temperature on probe head.

Order Information

KS1D Combination Probe for simultaneous measurement of oxygen (O_2) and unburnt residue (CO/H_2)
with connecting cable and connector

Description / Type	Type
KS1D Combination Probe without housing, with FEP-connecting cable up to 450 °C *, cable length 2 m, IP42	656R2010
PIF srew-in adapter M18x1.5 internal thread 3/4" external thread for KS1D without housing	655R1013

* In Connection with LT3-F max. 300 °C permissible flue gas temperature on probe head.

The information in this publication is subject to technical changes.

LAMTEC Meß- und Regeltechnik
für Feuerungen GmbH & Co. KG
Wiesenstraße 6
D-69190 Walldorf
Telefon: +49 (0) 6227 6052-0
Telefax: +49 (0) 6227 6052-57

info@lamtec.de
www.lamtec.de

Printed in Germany | Copyright © 2016

Print no. DLT3022-16-aEN-006