


*Fig. 1 F350 Flame scanner*

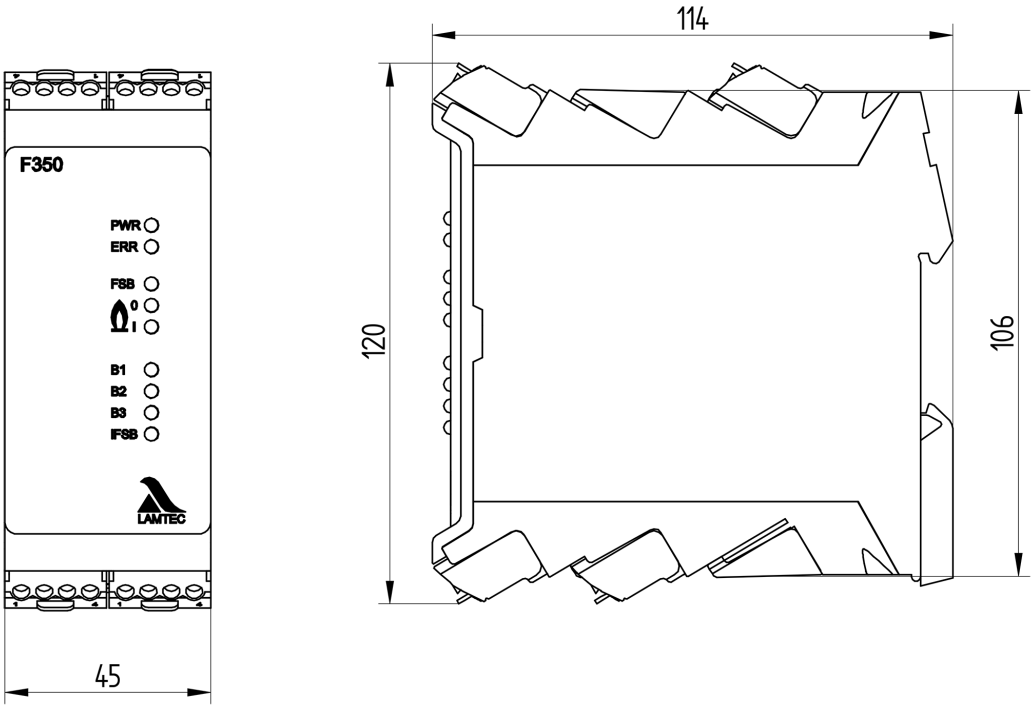


*Fig. 2 Dimensions of the F350 flame scanner*

# Technical Data Flame scanner F350

| **Dimensions** | |
|---|---|
| Dimensions (HxWxD) | 120 x 114 x 45 mm \| 4.72 x 4.49 x 1,77" in |
| Weight | 0,3 kg \| 0,66 lb |

| **Input Data** | |
|---|---|
| Power supply[1] | 24 VDC ±20 % (SELV/PELV) |
| Current consumption | < 200 mA |
| Switch-on current | < 500 mA |

| **Digital Inputs** | |
|---|---|
| **Change over of the operation modes** | |
| Power supply voltage [1] | 24 VDC ±20 % (SELV/PELV) |
| Supply current | approx. 6 mA |
| Maximum switching sequence from external | 3 s |

| **Digital Outputs** | |
|---|---|
| **Output contact 'standby signal'** | normally open contact (floating) |
| Permissible switching voltage[1] | 230 VAC maximum; 50 VDC extra-low voltage,<br>(see chapter Relay contact outputs in the corresponding operating instructions, for mixing SELV/230V) |
| Permissible switching current[1] | max. 500 mA[2]<br>min. 10 mA[2] |
| Fuse protection | required externally |
| **Output contact 'flame signal'** | relay contact, normally closed,<br>2 Relays, connected in series |
| Permissible switching voltage[1] | 230 VAC maximum; 50 VDC low voltage<br>(see chapter Relay contact outputs in the corresponding operating instructions, for mixing SELV/230V) |
| Permissible switching current[1] | max. 0,5 A cosφ 0,4 at ≤ 60 °C \| 140 °F[2]<br>max. 0.4 A cosφ 0,4 at ≤ 70 °C \| 158 °F[2]<br>min. 10 mA[2]<br>Provide external spark suppression for inductive firing rates, do not switch capacitive firing rates |
| Fuse protection | internal self-resetting fuse 900 mA + fuse 2,5 A |
| Relay contact, normally closed | read-back contact evaluation, positively driven |
| Safety time (FFDT)<br>Reaction time at loss of flame | $t_{VOff}$ adjustable by temporary password level 4* to 1, 2, 3, 4, 5 s (default: 1 s) |
| Wake-up time | $t_{VOn}$ adjustable up to 5 s |
| **Support energy for flame sensor** | |
| Voltage | 12 VDC |
| **Support energy for FSB devices** | |
| Voltage | 24 VDC 200 mA |

[1] The product must not be transported, stored or operated outside the specified information. All promises regarding safety-relevant functions otherwise lose their validity.

[2] Please note: Gold-plated relay contacts
The maximum load for inductive/capacitive loads (recurring current peaks during switching) is 100 mA. If this is exceeded, even briefly (current peaks), the specified minimum value of 10 mA can no longer be guaranteed. Provide external spark suppression.

* Provided by LAMTEC Support

# Technical Data Flame scanner F350

| Current Loop | Flame intensity - not failsafe |
|---|---|
| Current | 0/4 … 20 mA |
| Load | max. 500 Ω |
| Open circuit voltage | approx. 12 V |
| Basic error | ≤ 2 % above measuring range |

| Wear parts | |
|---|---|
| | non |

| Technical capacity | | |
|---|---|---|
| Connection cross-section | connectable conductor cross-section | |
| | single-wire: | 0.5 mm² ... 2.5 mm² \| AWG 20 ... AWG 14 |
| | flexible with ferrule: | 0.5 mm² ... 2.5 mm² \| AWG 20 ... AWG 14 |
| | flexible without ferrule: | 0.5 mm² \| AWG 20 |
| | stranded: | 0.5 mm² ... 2 mm² \| AWG 20 ... AWG 14 |
| Operation mode | continuous operation | |
| Safety integrity level | DIN EN 61508, SIL 3 Part 1-3 | |
| Overvoltage category | DIN EN 60730-1 | |
| Interference | DIN EN 60730-1 | |
| Emitted interference | DIN EN 55032, Class B | |

| Operating Conditions | |
|---|---|
| Relative humidity | 5 ... 95 % non-condensing |
| Vibration resistance | LR 0.7 g \| 0.015 lb |

| Environmental Conditions[1] | | |
|---|---|---|
| **Operation** | permissible temperature range | -25 ... +70 °C \| -13 ... 158 °F (condensation prohibited)<br>-40 ... +70 °C \| -40 ... 158 °F (condensation prohibited, not moved, not actuated) |
| **Transport** | permissible temperature range | -40 … +85 °C \| -40 ... +185 °F (condensation prohibited) |
| **Storage** | permissible temperature range | -40 … +85 °C \| -40 ... +185 °F (condensation prohibited) |
| **Degree of protection** | DIN EN 60529:2014 | IP20 - housing |

[1] The product must not be transported, stored or operated outside the specified information. All promises regarding safety-relevant functions otherwise lose their validity.

# Technical Data Flame scanner F350

## Order Information

| Description/Type | Order no |
|---|---|
| Flame monitoring device F350 for installation on a DIN rail, power supply voltage 24 VDC | **659G5000...** |

| A10 - CONNECTOR SET | Selection |
|---|---|
| SCREW TERMINALS STANDARD | /0 |
| SPRING TERMINALS [1)] | /S |

1) extended delivery time

## Approvals

The information in this publication is subject to technical changes.

**LAMTEC GmbH & Co. KG**
Josef-Reiert-Straße 26
69190 Walldorf
GERMANY
Telefon: +49 (0) 6227 6052-0
Telefax: +49 (0) 6227 6052-57

**info@lamtec.de**
**www.lamtec.de**

Printed in Germany | Copyright © 2026

Publication no. DLT7681-26-EN-003